GENERAL ARRANGEMENT

REMARKS

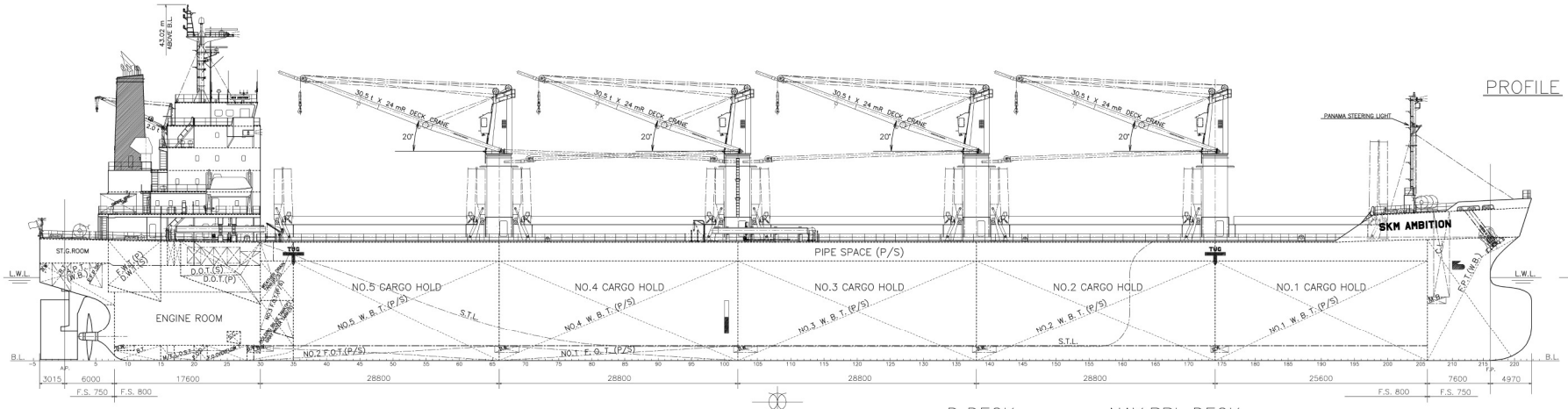

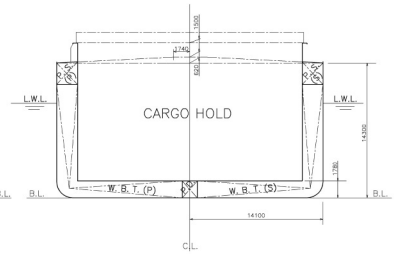

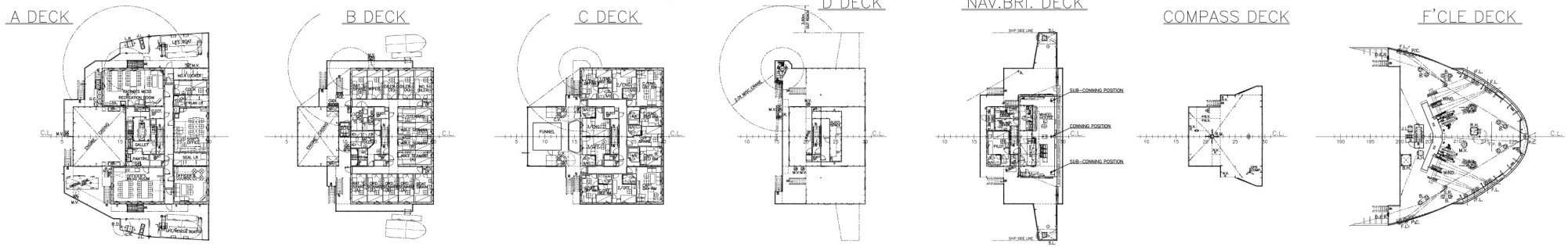

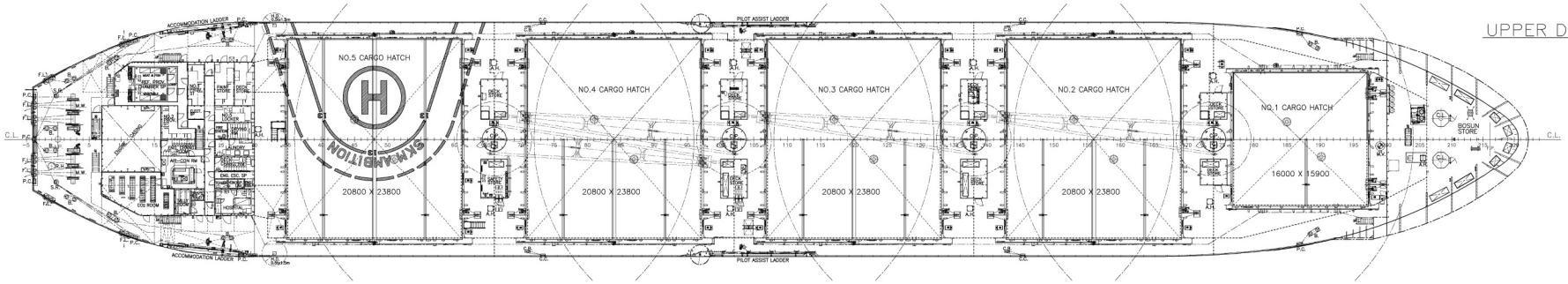

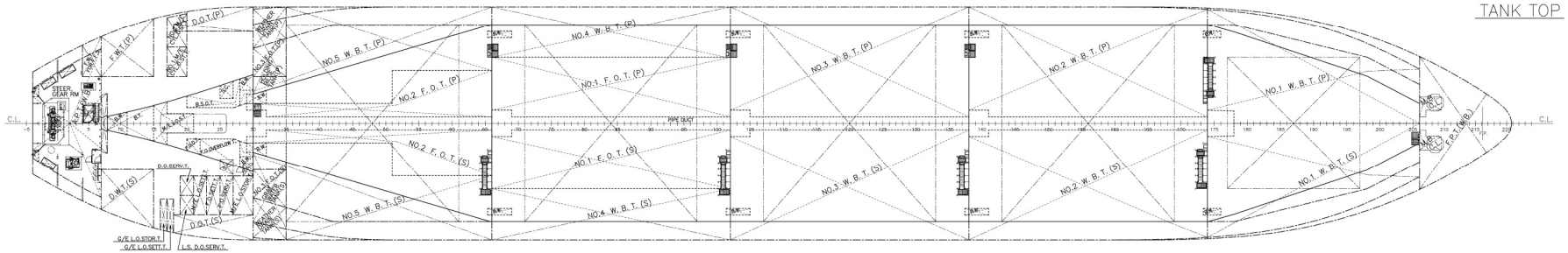

PRINCIPAL PARTICULARS

LENGTH (O.A.)	179.99 M
LENGTH (P.P.)	172.00 M
BREADTH (MLD)	28.20 M
DEPTH (MLD)	14.30 M
DRAFT (SUMMER)(EXT.)	10.100 M
DEADWEIGHT	33328 t
GROSS TONNAGE	21203
MAIN ENGINE	6UEC45LSE-1 x 1 SET
M.C.O.	6000 kW x 116 min^{-1}
SERVICE SPEED	about 14.3 KNOTS
CLASSIFICATION	
NK NS* (BCM, BC-XII, GRAB, EQ C DG, PSPC-WBT, BWTS) (IWS) (PSCM) MNS*	
Descriptive Note : Double hull construction applied to all cargo holds	

This document(drawing)is the PROPERTY of SHIN KURUSHIMA DOCKYARD CO.,Ltd. and is confidential.
In this connection, please kindly observe the followings.
It shall not be traced, nor copied, nor used for any other purpose, nor disclosed to third party without our written consent.
この書類（図面）は、当社の大切な財産であるものです。したがって当社の書面による承諾なしに、第三者に対する複写、複製、使用、開示を禁じます。その他当社のビジネスに支障ないよう、ご配慮願います。
株式会社 新来島どっく

秘

SNO.5755

GENERAL ARRANGEMENT

— FINISHED PLAN—

LIST NO. C- 3

IMO NO.	9635248		
GENERAL MANAGER		SHIN KURUSHIMA DOCKYARD CO.,LTD. EHIME JAPAN ENGINEERING DIVISION	
ASST.G. MANAGER	------		
MANAGER	T. Kawakami		
ASST. MANAGER	K. Shigemitsu		
STAFF	S. Seike	DATE 2013/3/18	DWG. NO. C02-002-00
DRAWN	T. Tsuchiya	SCALE 1/200	